Cambridge International AS & A Level

Cambridge Assessment International Education
Cambridge International Advanced Subsidiary and Advanced Level

CANDIDATE NAME

CENTRE NUMBER

CANDIDATE NUMBER

9318541237

PHYSICS **9702/42**

Paper 4 A Level Structured Questions **May/June 2019**

2 hours

Candidates answer on the Question Paper.

No Additional Materials are required.

READ THESE INSTRUCTIONS FIRST

Write your centre number, candidate number and name on all the work you hand in.
Write in dark blue or black pen.
You may use an HB pencil for any diagrams or graphs.
Do not use staples, paper clips, glue or correction fluid.
DO **NOT** WRITE IN ANY BARCODES.

Answer **all** questions.

Electronic calculators may be used.
You may lose marks if you do not show your working or if you do not use appropriate units.

At the end of the examination, fasten all your work securely together.
The number of marks is given in brackets [ ] at the end of each question or part question.

This document consists of **27** printed pages and **1** blank page.

DC (LEG/TP) 162132/3
© UCLES 2019

Cambridge Assessment International Education

[Turn over

Data

speed of light in free space	$c = 3.00 \times 10^{8}\,\text{m s}^{-1}$
permeability of free space	$\mu_0 = 4\pi \times 10^{-7}\,\text{H m}^{-1}$
permittivity of free space	$\varepsilon_0 = 8.85 \times 10^{-12}\,\text{F m}^{-1}$
	$(\frac{1}{4\pi\varepsilon_0} = 8.99 \times 10^{9}\,\text{m F}^{-1})$
elementary charge	$e = 1.60 \times 10^{-19}\,\text{C}$
the Planck constant	$h = 6.63 \times 10^{-34}\,\text{J s}$
unified atomic mass unit	$1\,\text{u} = 1.66 \times 10^{-27}\,\text{kg}$
rest mass of electron	$m_e = 9.11 \times 10^{-31}\,\text{kg}$
rest mass of proton	$m_p = 1.67 \times 10^{-27}\,\text{kg}$
molar gas constant	$R = 8.31\,\text{J K}^{-1}\,\text{mol}^{-1}$
the Avogadro constant	$N_A = 6.02 \times 10^{23}\,\text{mol}^{-1}$
the Boltzmann constant	$k = 1.38 \times 10^{-23}\,\text{J K}^{-1}$
gravitational constant	$G = 6.67 \times 10^{-11}\,\text{N m}^2\,\text{kg}^{-2}$
acceleration of free fall	$g = 9.81\,\text{m s}^{-2}$

© UCLES 2019

Formulae

uniformly accelerated motion	$s = ut + \frac{1}{2}at^2$ $v^2 = u^2 + 2as$
work done on/by a gas	$W = p\Delta V$
gravitational potential	$\phi = -\frac{Gm}{r}$
hydrostatic pressure	$p = \rho gh$
pressure of an ideal gas	$p = \frac{1}{3}\frac{Nm}{V}\langle c^2 \rangle$
simple harmonic motion	$a = -\omega^2 x$
velocity of particle in s.h.m.	$v = v_0 \cos \omega t$ $v = \pm \omega\sqrt{(x_0^2 - x^2)}$
Doppler effect	$f_o = \frac{f_s v}{v \pm v_s}$
electric potential	$V = \frac{Q}{4\pi\varepsilon_0 r}$
capacitors in series	$1/C = 1/C_1 + 1/C_2 + \ldots$
capacitors in parallel	$C = C_1 + C_2 + \ldots$
energy of charged capacitor	$W = \frac{1}{2}QV$
electric current	$I = Anvq$
resistors in series	$R = R_1 + R_2 + \ldots$
resistors in parallel	$1/R = 1/R_1 + 1/R_2 + \ldots$
Hall voltage	$V_H = \frac{BI}{ntq}$
alternating current/voltage	$x = x_0 \sin \omega t$
radioactive decay	$x = x_0 \exp(-\lambda t)$
decay constant	$\lambda = \frac{0.693}{t_{\frac{1}{2}}}$

© UCLES 2019

[Turn over

Answer **all** the questions in the spaces provided.

1 **(a)** Two point masses are separated by a distance x in a vacuum.
State an expression for the force F between the two masses M and m.
State the name of any other symbol used.

.....

.....

.....[1]

(b) A small sphere S is attached to one end of a rod, as shown in Fig. 1.1.

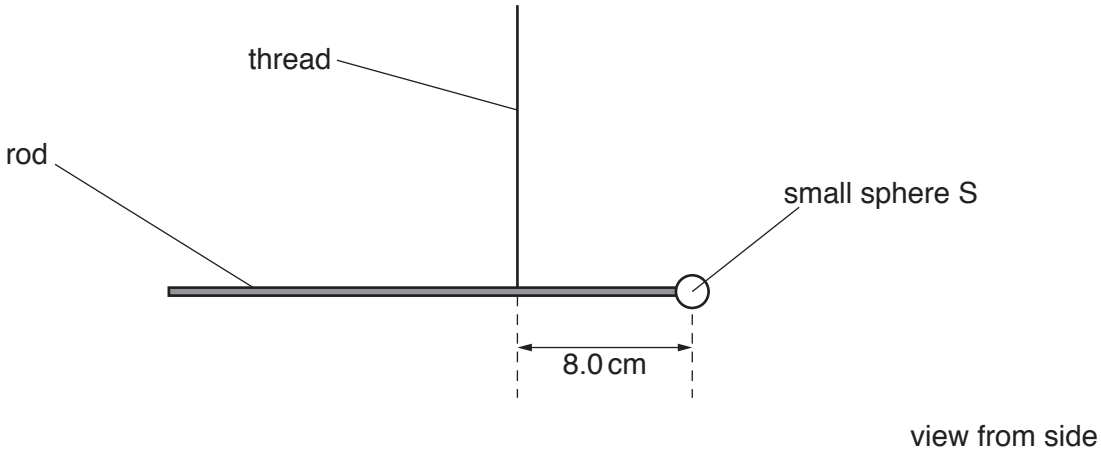

Fig. 1.1 (not to scale)

The rod hangs from a vertical thread and is horizontal.
The distance from the centre of sphere S to the thread is 8.0 cm.

A large sphere L is placed near to sphere S, as shown in Fig. 1.2.

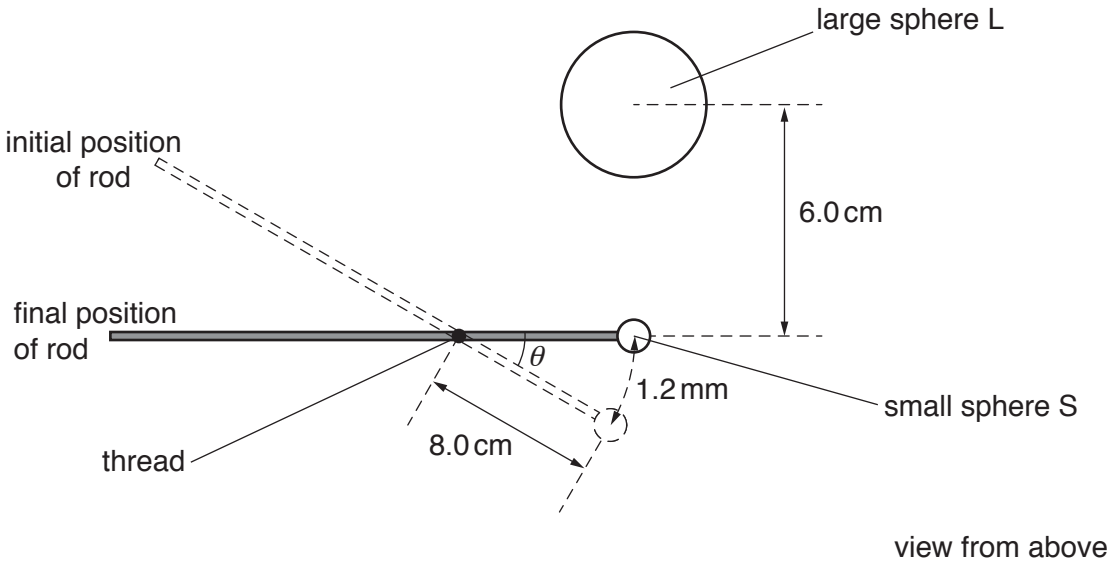

Fig. 1.2 (not to scale)

There is a force of attraction between spheres S and L, causing sphere S to move through a distance of 1.2 mm.
The line joining the centres of S and L is normal to the rod.

(i) Show that the angle θ through which the rod rotates is 1.5×10^{-2} rad.

[1]

(ii) The rotation of the rod causes the thread to twist.
The torque T (in N m) required to twist the thread through an angle β (in rad) is given by

$$T = 9.3 \times 10^{-10} \times \beta.$$

Calculate the torque in the thread when sphere L is positioned as shown in Fig. 1.2.

torque = ... N m [1]

(c) The distance between the centres of spheres S and L is 6.0 cm.
The mass of sphere S is 7.5 g and the mass of sphere L is 1.3 kg.

(i) By equating the torque in **(b)(ii)** to the moment about the thread produced by gravitational attraction between the spheres, calculate a value for the gravitational constant.

gravitational constant = ... $N m^2 kg^{-2}$ [3]

© UCLES 2019

[Turn over

(ii) Suggest why the total force between the spheres may not be equal to the force calculated using Newton's law of gravitation.

.....

.....[1]

[Total: 7]

© UCLES 2019

2 **(a)** The first law of thermodynamics may be expressed in the form

$$\Delta U = q + w.$$

(i) State, for a system, what is meant by:

1. $+q$

.....

.....

2. $+w$.

.....

.....
[2]

(ii) State what is represented by a negative value of ΔU.

.....

.....[1]

(b) An ideal gas, sealed in a container, undergoes the cycle of changes shown in Fig. 2.1.

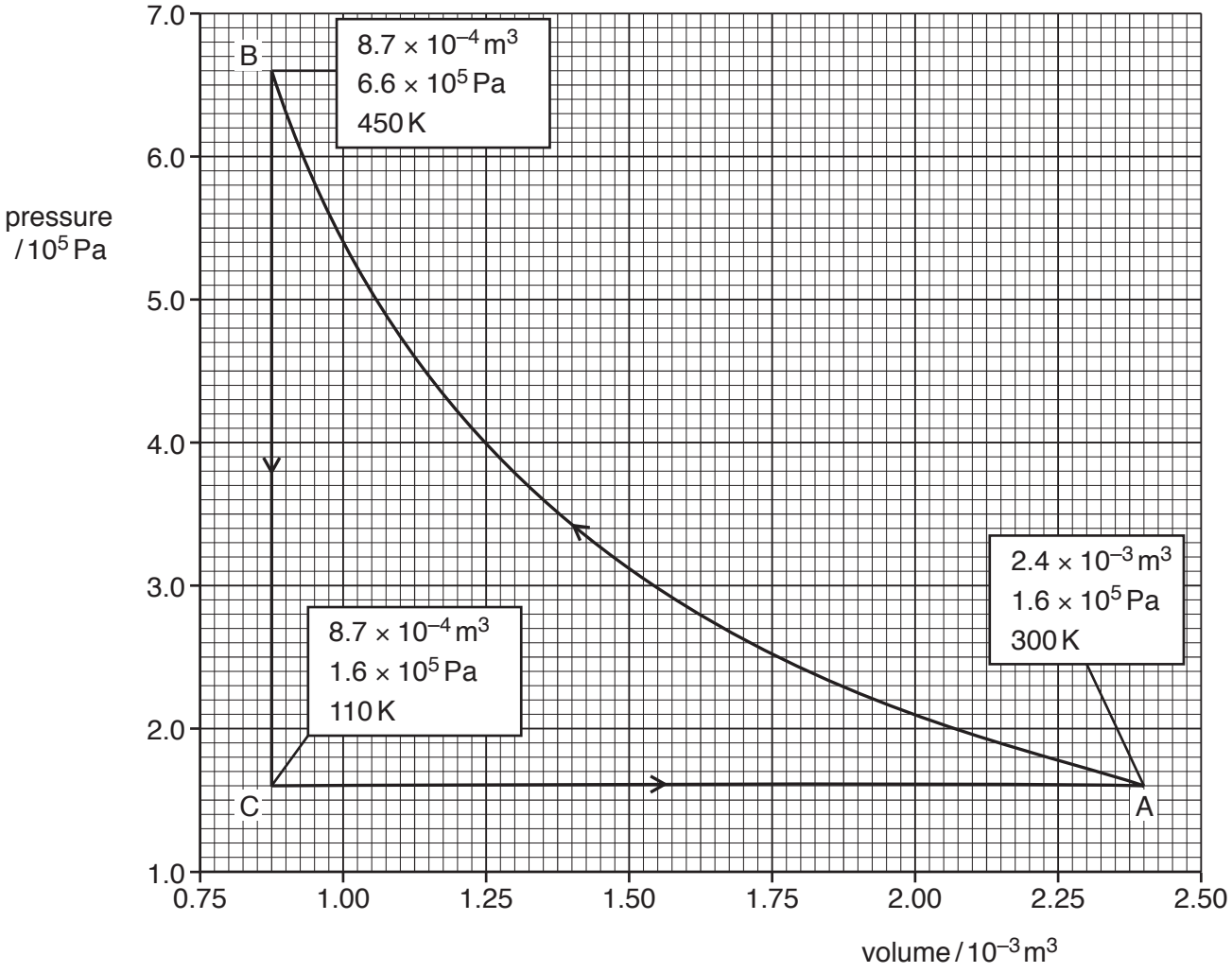

Fig. 2.1

At point A, the gas has volume $2.4 \times 10^{-3}\,m^3$, pressure 1.6×10^5 Pa and temperature 300 K.

The gas is compressed suddenly so that no thermal energy enters or leaves the gas during the compression. The amount of work done is 480 J so that, at point B, the gas has volume $8.7 \times 10^{-4}\,m^3$, pressure 6.6×10^5 Pa and temperature 450 K.

The gas is now cooled at constant volume so that, between points B and C, 1100 J of thermal energy is transferred. At point C, the gas has pressure 1.6×10^5 Pa and temperature 110 K.

Finally, the gas is returned to point A.

© UCLES 2019

(i) State and explain the total change in internal energy of the gas for one complete cycle ABCA.

.....

.....

.....[2]

(ii) Calculate the external work done on the gas during the expansion from point C to point A.

work done = ... J [2]

(iii) Complete Fig. 2.2 for the changes from:

1. point A to point B

2. point B to point C

3. point C to point A.

change	$+q$/J	$+w$/J	ΔU/J
A → B	.....	.....	.....
B → C	.....	.....	.....
C → A	.....	.....	.....

Fig. 2.2

[4]

[Total: 11]

3 A spring is hung vertically from a fixed point. A mass M is hung from the other end of the spring, as illustrated in Fig. 3.1.

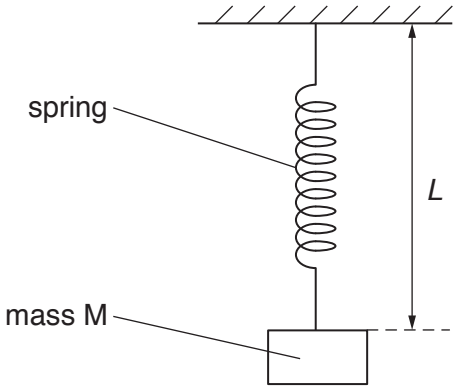

Fig. 3.1

The mass is displaced downwards and then released. The subsequent motion of the mass is simple harmonic.

The variation with time t of the length L of the spring is shown in Fig. 3.2.

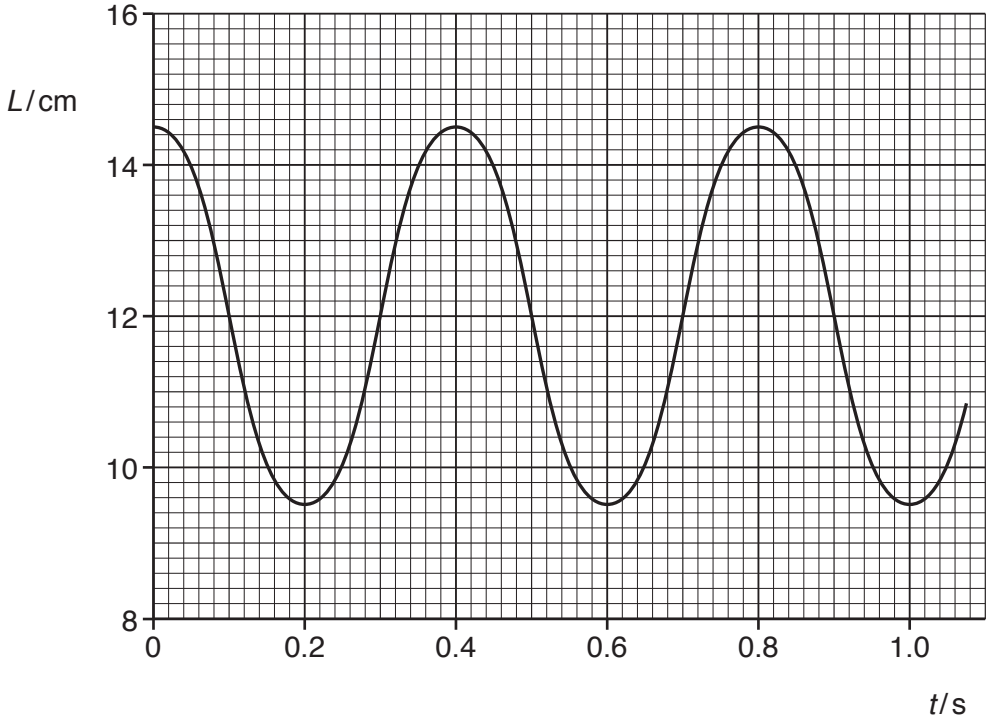

Fig. 3.2

(a) State:

(i) one time at which the mass is moving with maximum speed

time = ... s [1]

(ii) one time at which the spring has maximum elastic potential energy.

time = ... s [1]

© UCLES 2019

(b) Use data from Fig. 3.2 to determine, for the motion of the mass:

(i) the angular frequency ω

ω = ... rad s^{-1} [2]

(ii) the maximum speed

maximum speed = ... m s^{-1} [2]

(iii) the magnitude of the maximum acceleration.

maximum acceleration = ... m s^{-2} [2]

(c) The mass M is now suspended from two springs, each identical to that in Fig. 3.1, as shown in Fig. 3.3.

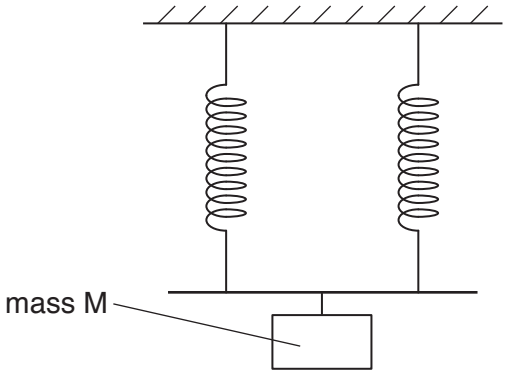

Fig. 3.3

Suggest and explain the change, if any, in the period of oscillation of the mass. A numerical answer is not required.

.....

.....

.....[2]

[Total: 10]

© UCLES 2019

4 **(a)** State what is meant by the *specific acoustic impedance* of a medium.

.....

.....

.....[2]

(b) A parallel beam of ultrasound of intensity I_0 is incident on the boundary between two media A and B, as illustrated in Fig. 4.1.

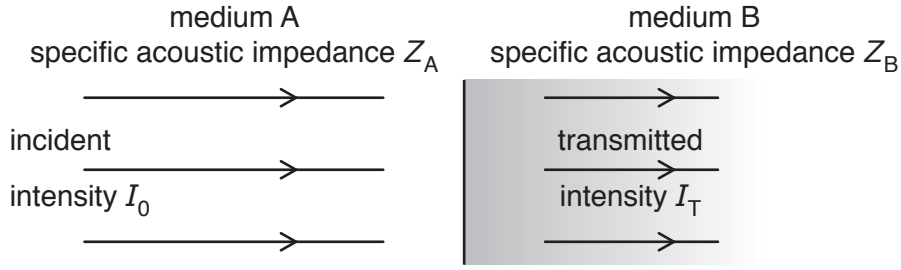

Fig. 4.1

The two media A and B have specific acoustic impedances Z_A and Z_B respectively. The intensity of the beam transmitted through the boundary is I_T.

State how the ratio

$$\frac{\text{intensity } I_T \text{ of transmitted beam}}{\text{intensity } I_0 \text{ of incident beam}}$$

depends on the relative magnitudes of Z_A and Z_B.

.....

.....

.....

.....[2]

(c) The linear absorption (attenuation) coefficient μ of medium B is $23\,\text{m}^{-1}$.

Calculate the thickness of medium B required to reduce the intensity of the ultrasound beam to 34% of its initial intensity in medium B.

thickness = ... m [3]

[Total: 7]

© UCLES 2019

[Turn over

5 **(a)** For a signal transmitted along an optic fibre, state what is meant by:

(i) *attenuation*

.....

.....[1]

(ii) *noise*.

.....

.....

.....[2]

(b) The initial section of the transmission line for a signal from a telephone exchange is illustrated in Fig. 5.1.

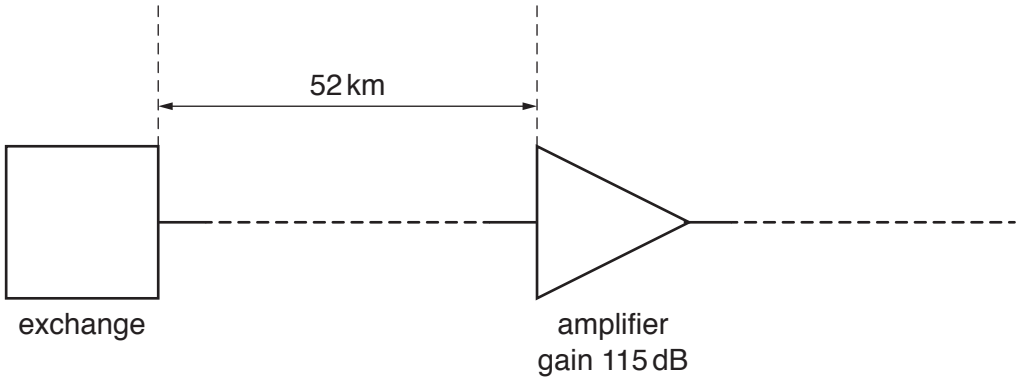

Fig. 5.1

At the exchange, the input signal to the transmission line has a power of 2.5×10^{-3} W.

After the signal has travelled a distance of 52 km along the transmission line, the power of the signal is 7.8×10^{-16} W. The signal is then amplified.

(i) Calculate the attenuation per unit length, in dB km^{-1}, in the transmission line.

attenuation per unit length = ... dB km^{-1} [3]

(ii) The gain of the amplifier is 115 dB.

Calculate the power of the signal at the output of the amplifier.

power = ... W [2]

[Total: 8]

6 **(a)** State what is meant by *electric potential* at a point.

.....

.....

.....[2]

(b) Two parallel metal plates A and B are held a distance *d* apart in a vacuum, as illustrated in Fig. 6.1.

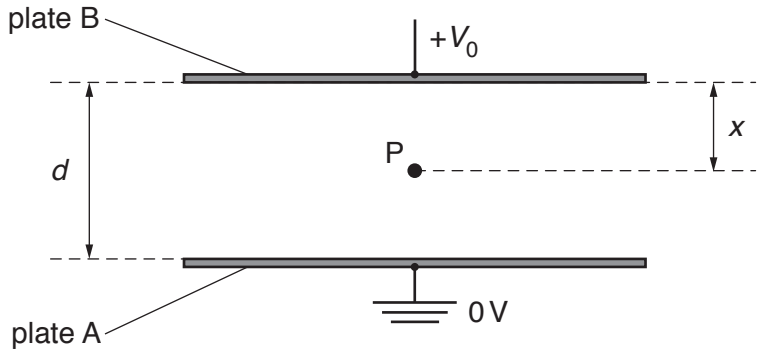

Fig. 6.1

Plate A is earthed and plate B is at a potential of +V_0.

Point P is situated in the centre region between the plates at a distance *x* from plate B. The potential at point P is *V*.

On Fig. 6.2, show the variation with *x* of the potential *V* for values of *x* from *x* = 0 to *x* = *d*.

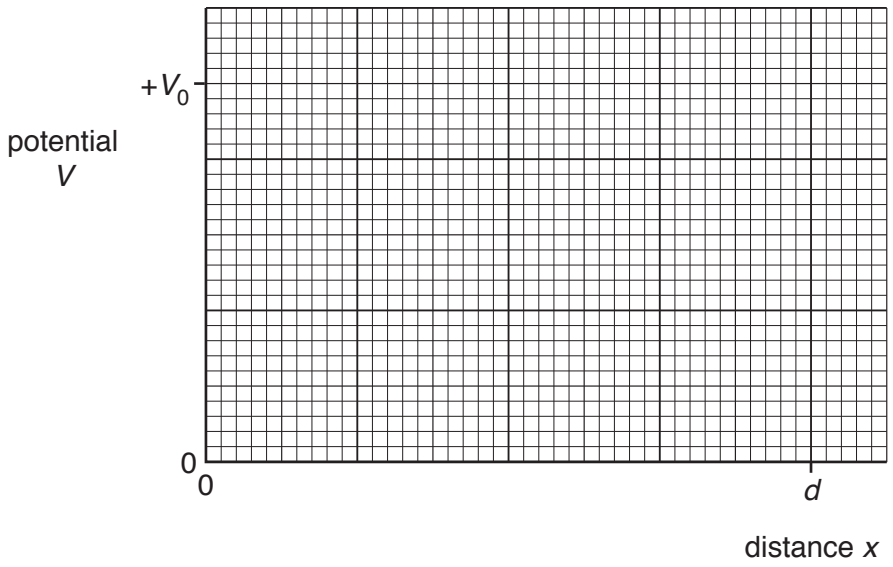

Fig. 6.2

[3]

© UCLES 2019

(c) Two isolated solid metal spheres M and N, each of radius *R*, are situated in a vacuum. Their centres are a distance *D* apart, as illustrated in Fig. 6.3.

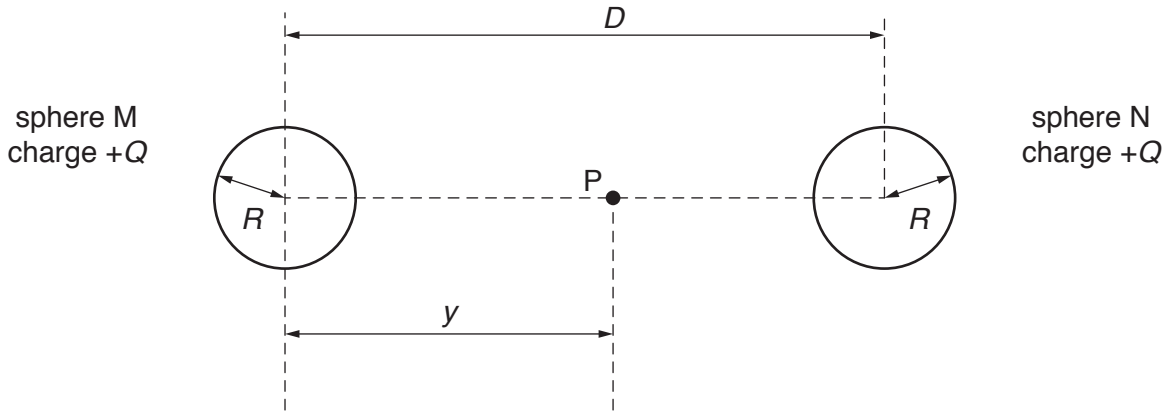

Fig. 6.3

Each sphere has charge +*Q*.

Point P lies on the line joining the centres of the two spheres, and is a distance *y* from the centre of sphere M.

On Fig. 6.4, show the variation with distance *y* of the electric potential at point P, for values of *y* from *y* = 0 to *y* = *D*.

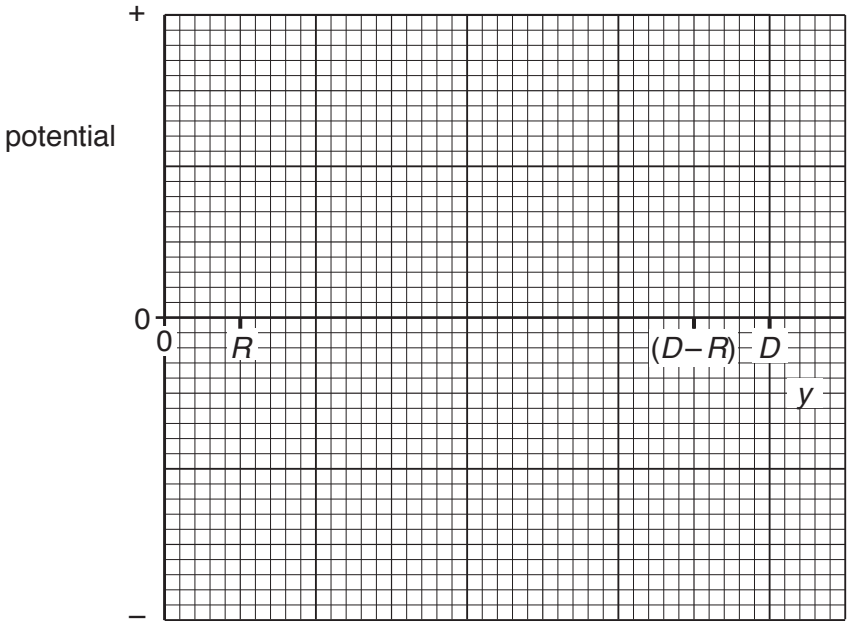

Fig. 6.4

[4]

[Total: 9]

7 **(a)** Use band theory to explain why the resistance of an intrinsic semiconductor decreases as its temperature rises.

.....

.....

.....

.....

.....

.....

.....

.....[5]

(b) The variation with temperature t of the resistance R of a thermistor is shown in Fig. 7.1.

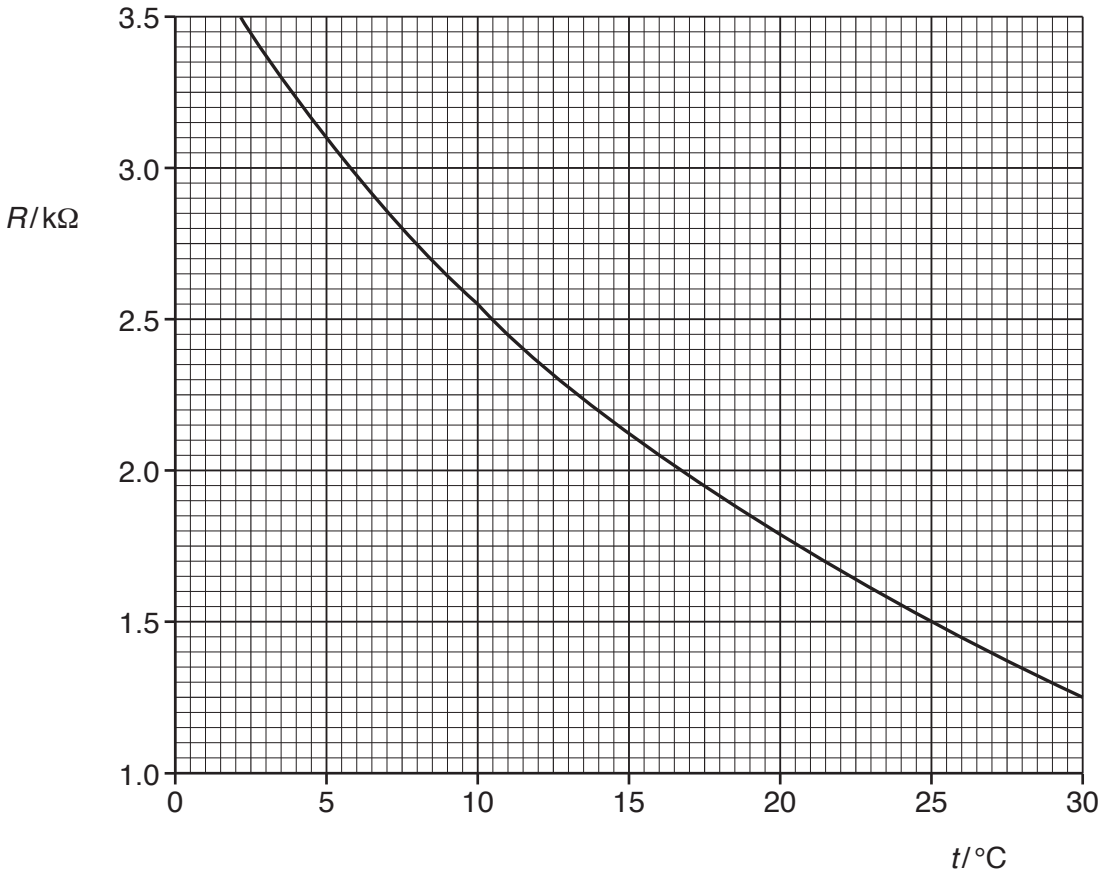

Fig. 7.1

The thermistor is connected into the circuit shown in Fig. 7.2.

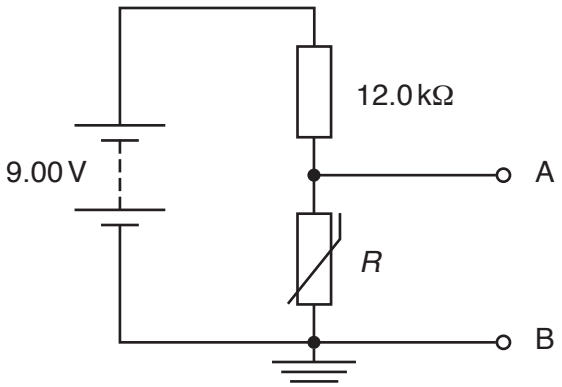

Fig. 7.2

The battery has electromotive force (e.m.f.) 9.00 V and negligible internal resistance.

When the temperature of the thermistor is 25 °C, the potential difference between the terminals A and B is 1.00 V.

The temperature of the thermistor changes from 25 °C to 10 °C.
Determine, to two significant figures, the change in potential difference between A and B.

change = ... V [3]

(c) The temperature of the thermistor in **(b)** changes from 25 °C to 10 °C at a constant rate.

State **two** reasons why the potential difference between A and B does **not** change at a constant rate.

1. .....

.....

2. .....

.....
[2]

[Total: 10]

© UCLES 2019

8 An electron is travelling in a vacuum at a speed of $3.4 \times 10^7\,\text{m s}^{-1}$. The electron enters a region of uniform magnetic field of flux density 3.2 mT, as illustrated in Fig. 8.1.

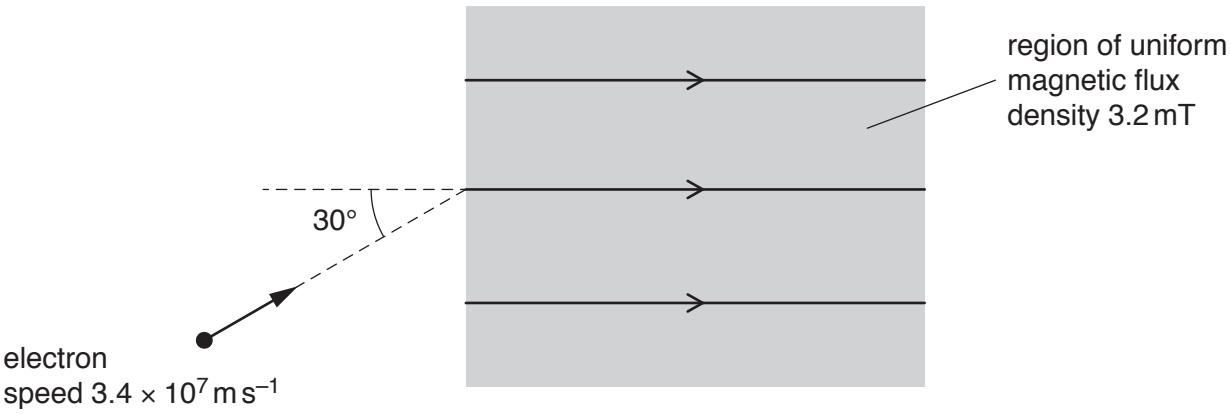

Fig. 8.1

The initial direction of the electron is at an angle of 30° to the direction of the magnetic field.

(a) When the electron enters the magnetic field, the component of its velocity v_N normal to the direction of the magnetic field causes the electron to begin to follow a circular path.

Calculate:

(i) v_N

v_N = ... m s^{-1} [1]

(ii) the radius of this circular path.

radius = ... m [3]

(b) State the magnitude of the force, if any, on the electron in the magnetic field due to the component of its velocity along the direction of the field.

.....[1]

© UCLES 2019

(c) Use information from **(a)** and **(b)** to describe the resultant path of the electron in the magnetic field.

.....

.....[1]

[Total: 6]

9 Part of a circuit incorporating an operational amplifier (op-amp) is shown in Fig. 9.1.

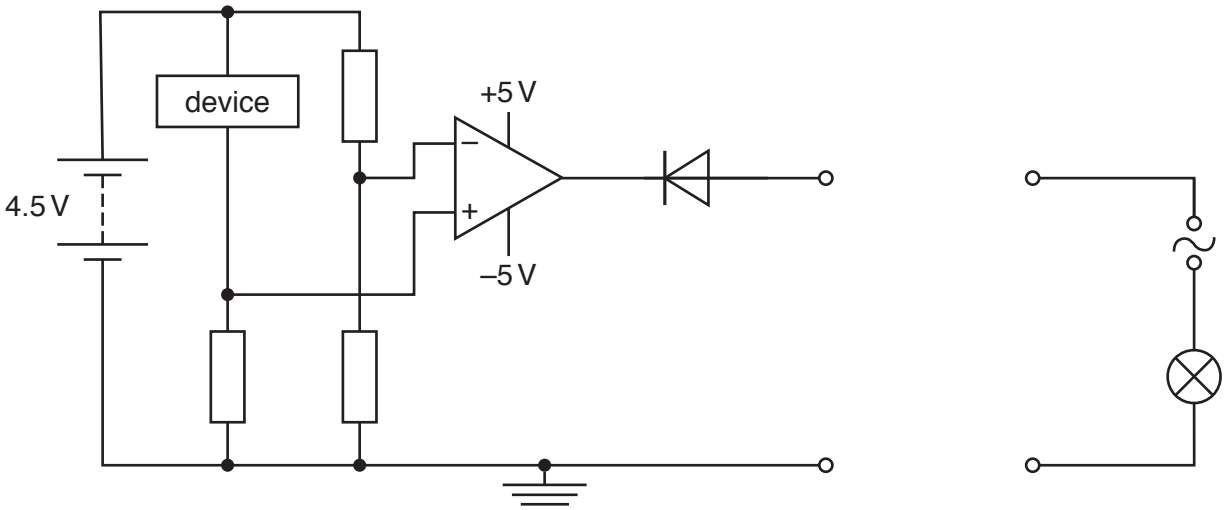

Fig. 9.1

(a) A relay is connected to the output of the op-amp circuit so that a lamp may be switched on or off.

(i) Complete Fig. 9.1 to show the relay connected into the circuit. [2]

(ii) State and explain whether the output of the op-amp is positive or negative for the lamp to be switched on.

.....

.....

.....[2]

(b) State the device in Fig. 9.1 that could be used so that the circuit indicates a change in:

(i) the bending of a rod

.....[1]

(ii) the level of daylight to switch on a street light.

.....[1]

[Total: 6]

© UCLES 2019

10 (a) State Faraday's law of electromagnetic induction.

.....

.....

.....[2]

(b) An ideal transformer is illustrated in Fig. 10.1.

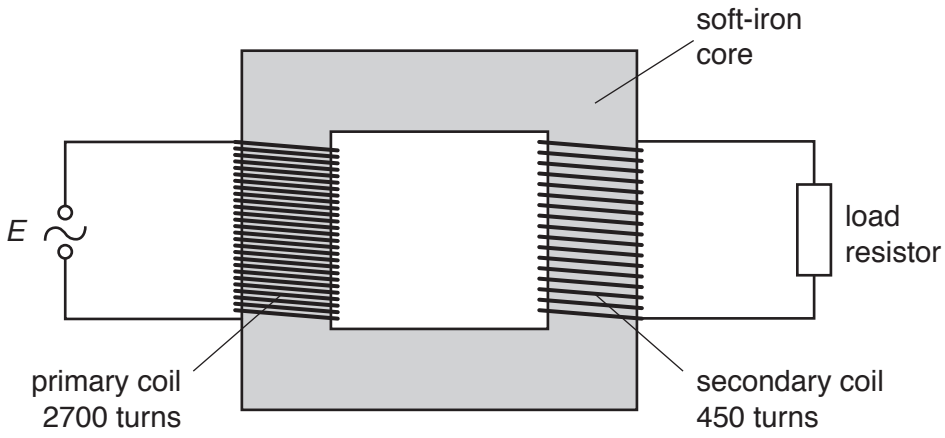

Fig. 10.1

Explain why, when there is an alternating current in the primary coil, there is a current in the load resistor.

.....

.....

.....

.....

.....[3]

(c) The primary coil in **(b)** has 2700 turns. The secondary coil has 450 turns.

The e.m.f. E applied across the primary coil is given by the expression

$$E = 220\sin(100\pi t)$$

where E is measured in volts and t is the time in seconds.

Calculate the root-mean-square (r.m.s.) e.m.f. induced in the secondary coil.

r.m.s. e.m.f. = ... V [3]

[Total: 8]

© UCLES 2019

11 **(a)** State what is meant by a *photon*.

.....

.....

.....[2]

(b) A stationary cobalt-60 ($^{60}_{27}$Co) nucleus emits a γ-ray photon of energy 1.18 MeV.

(i) Calculate the wavelength of the photon.

wavelength = ... m [2]

(ii) Show that the momentum of the photon is 6.3×10^{-22} N s.

[2]

(c) Use information in **(b)(ii)** to determine the recoil speed of the cobalt-60 nucleus when the γ-ray photon is emitted.

speed = ... m s^{-1} [2]

[Total: 8]

12 **(a)** State what is meant by the *binding energy* of a nucleus.

.....

.....

.....[2]

(b) Some masses are shown in Fig. 12.1.

	mass / u
proton ($^{1}_{1}$p)	1.007
neutron ($^{1}_{0}$n)	1.009
lanthanum-141 ($^{141}_{57}$La) nucleus	140.911

Fig. 12.1

Calculate the binding energy of a nucleus of lanthanum-141.

binding energy = ... J [4]

(c) The nuclide lanthanum-141 ($^{141}_{57}$La) has a half-life of 3.9 hours.

Initially, a radioactive source contains only lanthanum-141. The initial activity of the source is A_0.

(i) Calculate the time for the activity of the lanthanum-141 to be reduced to $0.40A_0$.

time = ... hours [3]

© UCLES 2019

(ii) Suggest why the total activity of the radioactive source measured at the time calculated in **(i)** may be greater than $0.40A_0$.

.....

.....[1]

[Total: 10]

BLANK PAGE

Permission to reproduce items where third-party owned material protected by copyright is included has been sought and cleared where possible. Every reasonable effort has been made by the publisher (UCLES) to trace copyright holders, but if any items requiring clearance have unwittingly been included, the publisher will be pleased to make amends at the earliest possible opportunity.

To avoid the issue of disclosure of answer-related information to candidates, all copyright acknowledgements are reproduced online in the Cambridge Assessment International Education Copyright Acknowledgements Booklet. This is produced for each series of examinations and is freely available to download at www.cambridgeinternational.org after the live examination series.

Cambridge Assessment International Education is part of the Cambridge Assessment Group. Cambridge Assessment is the brand name of the University of Cambridge Local Examinations Syndicate (UCLES), which itself is a department of the University of Cambridge.

© UCLES 2019